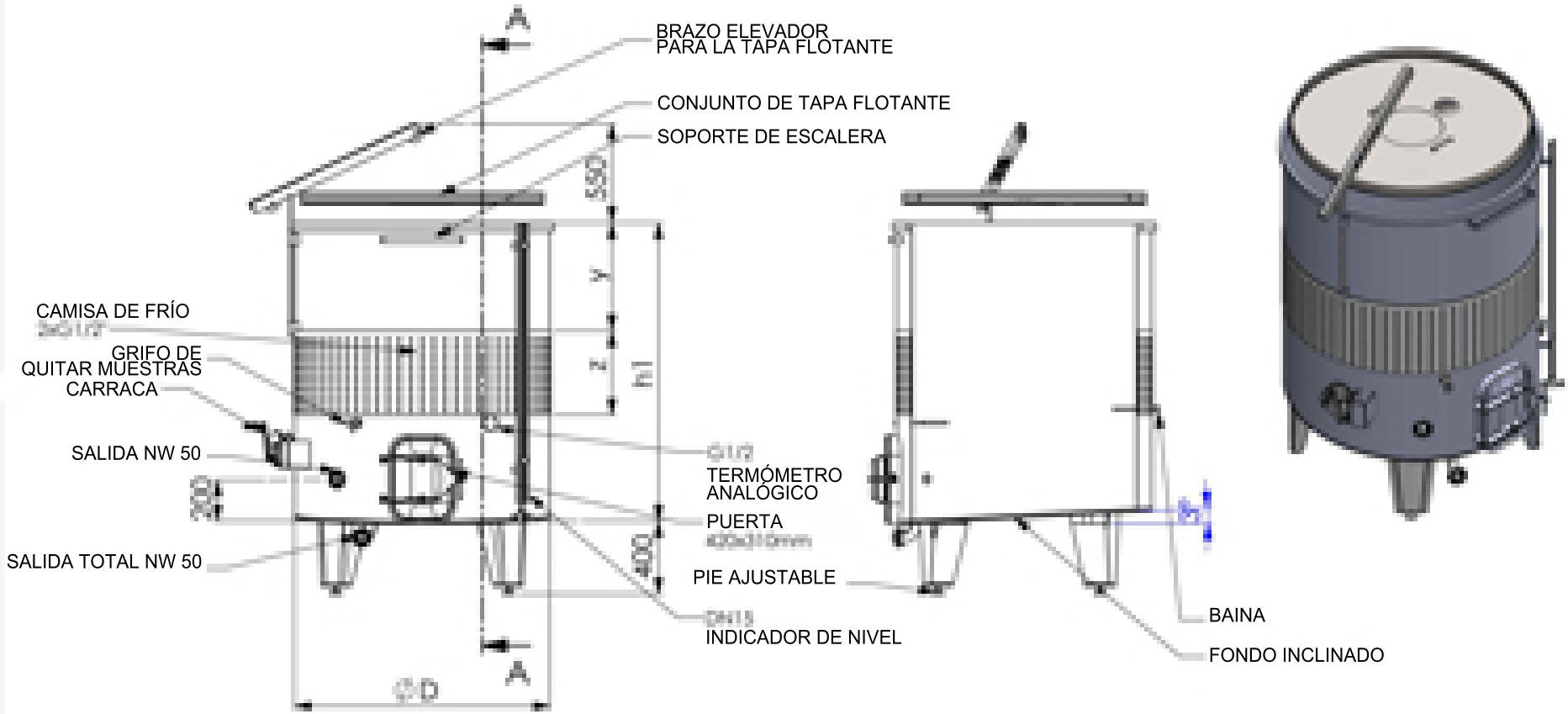

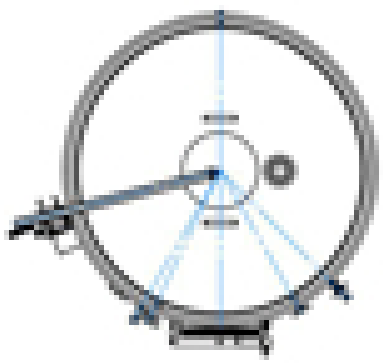

Pos.	CAPACIDAD	ØD [mm]	h1 [mm]	z [mm]	y [mm]
1	1500 L	950	1500	40	540
2	1800 L	1100	1500	40	540
3	2000 L	1200	1500	40	540
4	2400 L	1400	1500	40	540
5	3000 L	1400	2000	50	750

InVIA